ARISTON

SPARE PARTS EXPLODED VIEW
STORAGE ELECTRIC WATER HEATERS

Model

LYDOS ECO ABS PW

R8218140-04 - 24/10/2022

EN	FR	IT	ES	DE	NL

LYDOS ECO ABS PW

Storage Electric Water Heaters

Col	Reference	Model type	Begin	End
1	3201974	LYDOS ECO ABS PW 50 V	07-2018	-
2	3201975	LYDOS ECO ABS PW 80 V	07-2018	-
3	3201976	LYDOS ECO ABS PW 100 V	07-2018	-

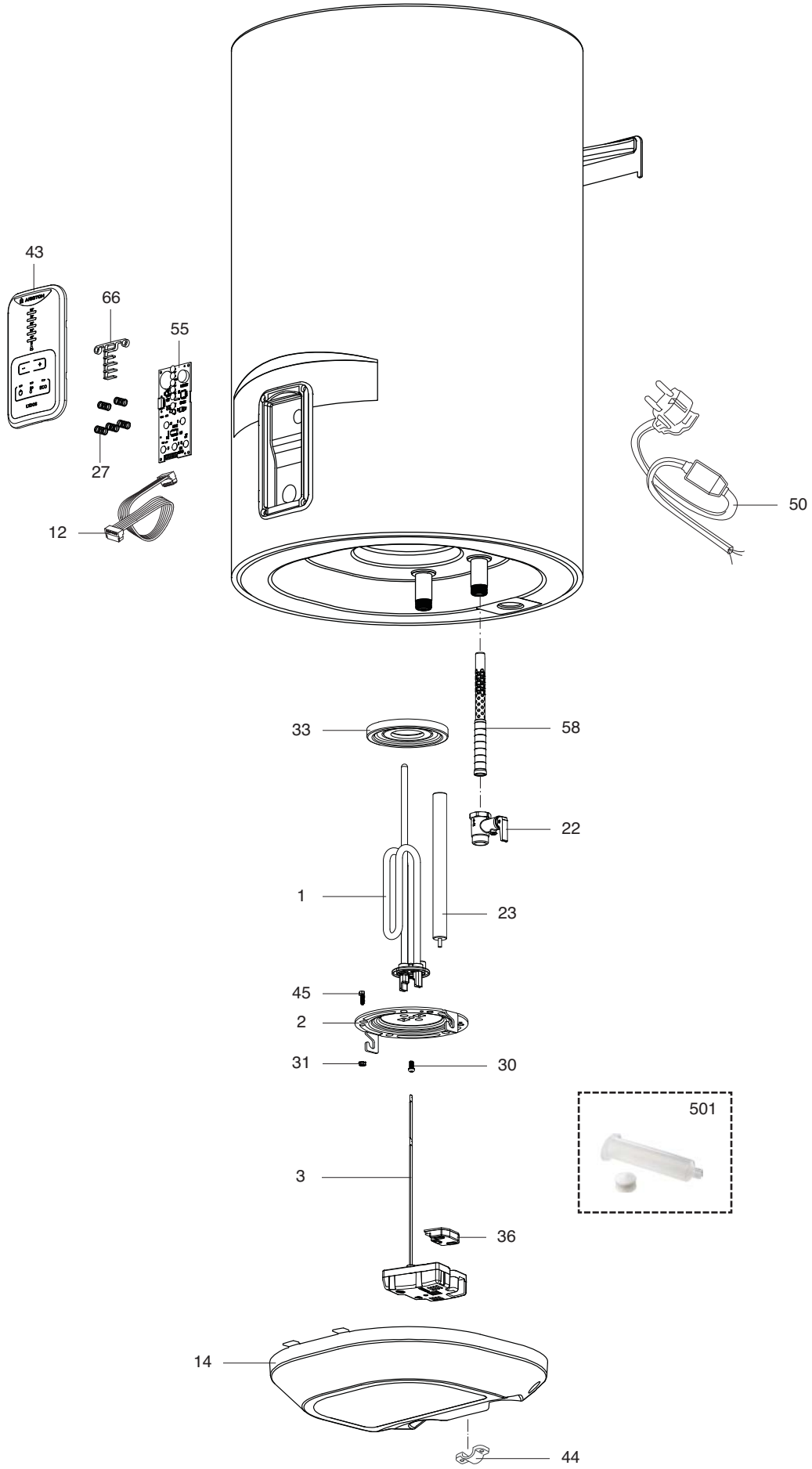
43
66
55
27
12
50
33
58
22
1
23
45
2
31
30
501
3
36
14
44

	Description	Manf. Pt. N	Type	LYD. ECO ABS PW 50	LYD. ECO ABS PW 80	LYD. ECO ABS PW 100	4	5	6	7	8	9	10	11	12	13	14	15	16	17	18	From	to
				1	2	3																	
0001	НАГРЕВАТЕЛЬНЫЙ ЭЛЕМЕНТ 2500W 220-240V	65112788		●	●	●																	
0002	ФЛАНЕЦ (5 БОЛТОВ)	65118098		●	●	●																	
0003	ЭЛЕКТРОННЫЙ ТЕРМОСТАТ	65116559		●	●	●																	
0012	КАБЕЛЬ ДИСПЛЕЯ	65118085		●	●	●																	
0014	КРЫШКА ПЛАСТИКОВАЯ	65117999		●	●	●																	
0022	ПРЕДОХРАНИТЕЛЬНЫЙ КЛАПАН (1/2'' 8,5 БАР)	571730		●	●	●																	
0023	МАГНИЕВЫЙ АНОД D:25,5 L:230 M5-M8	993014-01		●	●	●																	
0027	ПРУЖИНА	65117996		●	●	●																	
0030	ВИНТ M6X12	993000		●	●	●																	
0031	ГАЙКА M6	994140		●	●	●																	
0033	ПРОКЛАДКА ФЛАНЦА	65111788		●	●	●																	
0036	ПЛАТА T-FLEX	65116753		●	●	●																	
0043	ПАНЕЛЬ УПРАВЛЕНИЯ	65118096		●	●	●																	
0044	ЗАЖИМ ДЛЯ КАБЕЛЯ	65121205		●	●	●																	
0045	ВИНТ M6X20	65151225-FA		●	●	●																	
0050	КАБЕЛЬ ПИТАНИЯ С УЗО (16А 1,0м)	65150965		●	●	●																	
0055	ПЛАТА ДИСПЛЕЯ	65118097		●	●	●																	
0058	РАССЕКАТЕЛЬ ВОДЫ (1/2'' H=70)	65117462		●	●	●																	
0066	СВЕТОПРОВОДЯЩАЯ ПЛАСТИНА	65117997		●	●	●																	
0500	ACCESSORIES																						
0501	ТЕРМОПАСТА	65118088		●	●	●																	

LIST OF THE ABBREVIATIONS

HW	:	Hot water.
CW	:	Cold water.
C	:	Ceramic resistance (normal heating).
Ca	:	Ceramic resistance (accelerated heating)
TP	:	Immersion heater.
1F	:	With fittings.
2F	:	Without fittings.
3F	:	With fittings and another outlet connection.
AMI	:	With mixing valve.
SMI	:	Without mixing valve.
PUISS	:	Power of th appliance.
PN	:	Appliance with normal pression.
LP	:	Appliance with low pression.
PV	:	Appliance with variable power.
PF	:	Appliance with fixed power.

IDENTIFICATION PLATE

SERIAL NUMBER

6 Characters : 03 09 08
- Year of manufacture
- Manufacturing day
- Month of manufacture

9 Characters : 5 9 12 0606
- Year of manufacture
- Month of manufacture
- Sequencial number

14 Characters : SI-V-0B0 45 07 0001
- Sequencial number
- Year of manufacture : 6 → 2004, 7 → 2005, 8 → 2006, etc ...
- Month of manufacture : 25 → January, 13 → February, 32 → March, 35 → April, 39 → May, 45 → June, 43 → July, 29 → August, 40 → September, 38 → October, 51 → November, 12 → December
- Product model

14 Characters : 111518 XX 000010
- Month of manufacture
- Day of manufacture
- Sequencial number
- Year of manufacture

15 Characters : 02 11 00001 007843
- Year of manufacture
- Month of manufacture
- Product reference
- Sequencial number

21 Characters : 3200050 XX 08115 0000001
- Product reference
- Sequencial number
- Year (08) / Manufacturing day (115)

22 Characters : 3200050 XX 070115 0000001
- Product reference
- Sequencial number
- Year (07) / Month (01) / Manufacturing day (15)

The indications mentionned on the prices, commercial or technical literature and the scheme are written for your guidance and are available at a given time. The CONSTRUCTOR retains the power to modify the presentation, the form, the size, the conception or the material of the products.